SOLUS CENTER TEMPLATE @ 100% Scale

Trimmed Size

Image/Logo Safe Area

Full Bleed Area - 40mm

Height includes 10mm to allow for paper stretch/shrinkage during heat process.

# SOLUS RETAIL COUNTER GRAPHIC

## Without Cutout

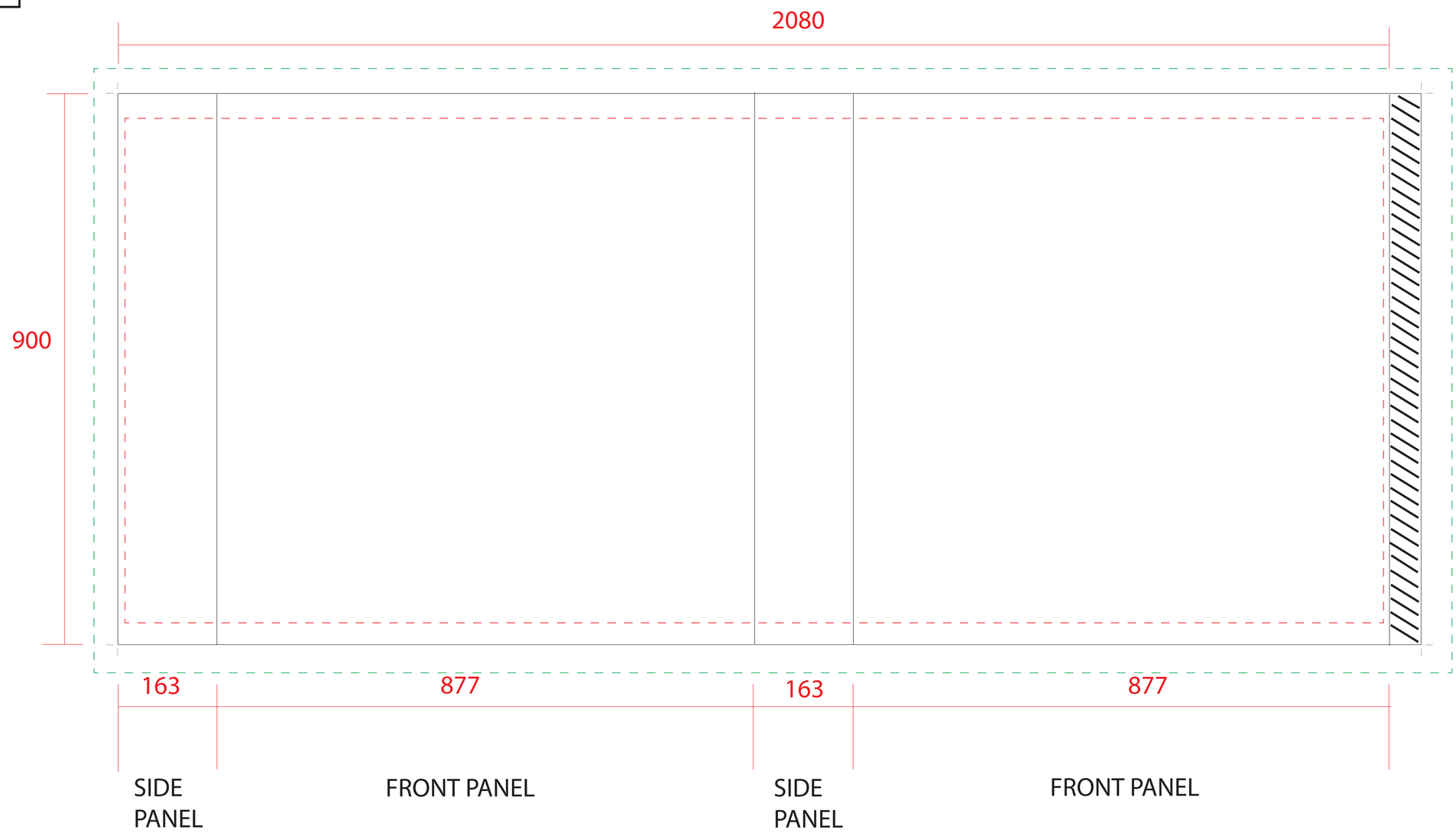

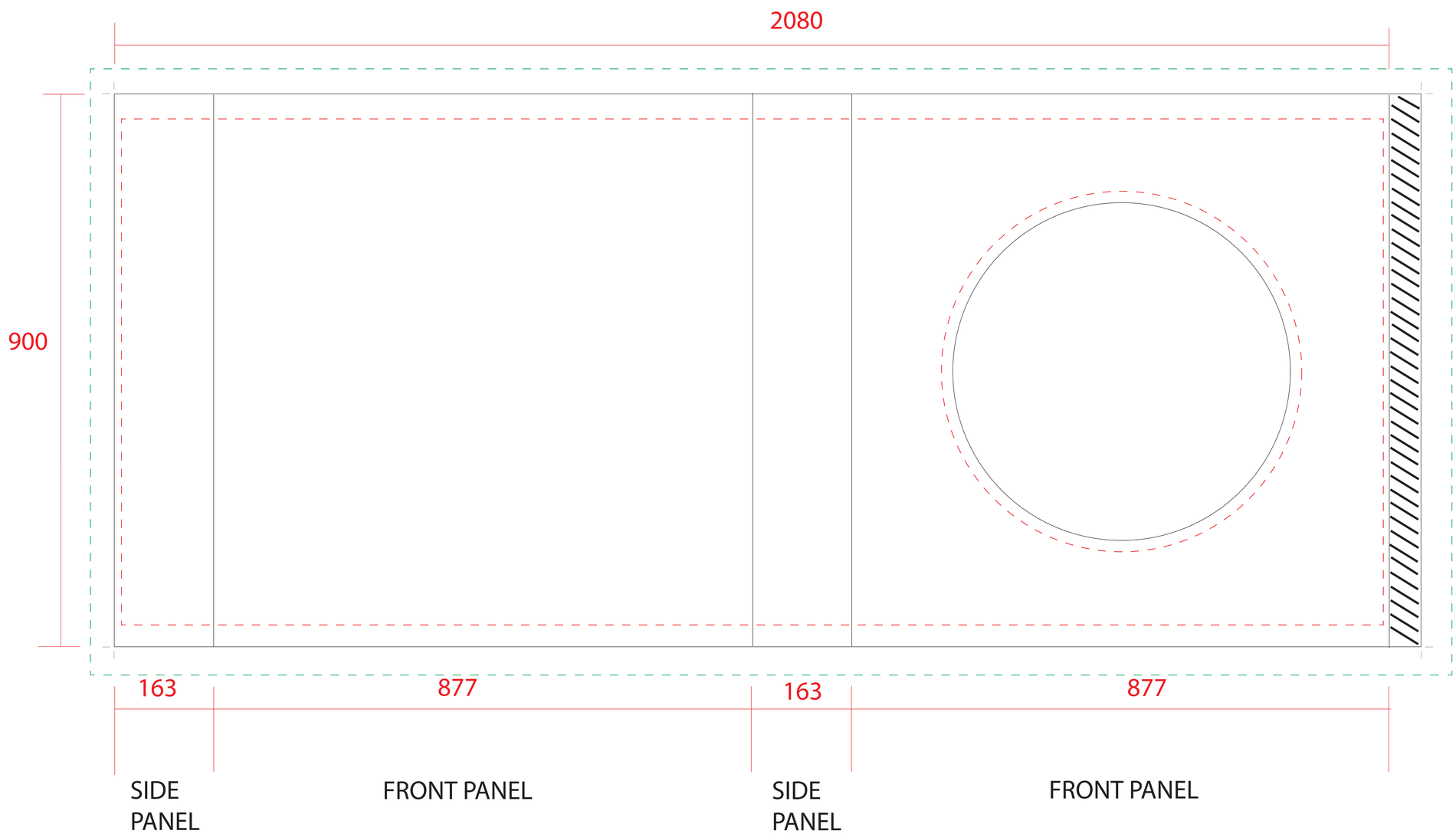
## With Cutout