Please position artwork on this section and extend all the way to the red bleed guide. Keep all important text and logos inside the black trim line.

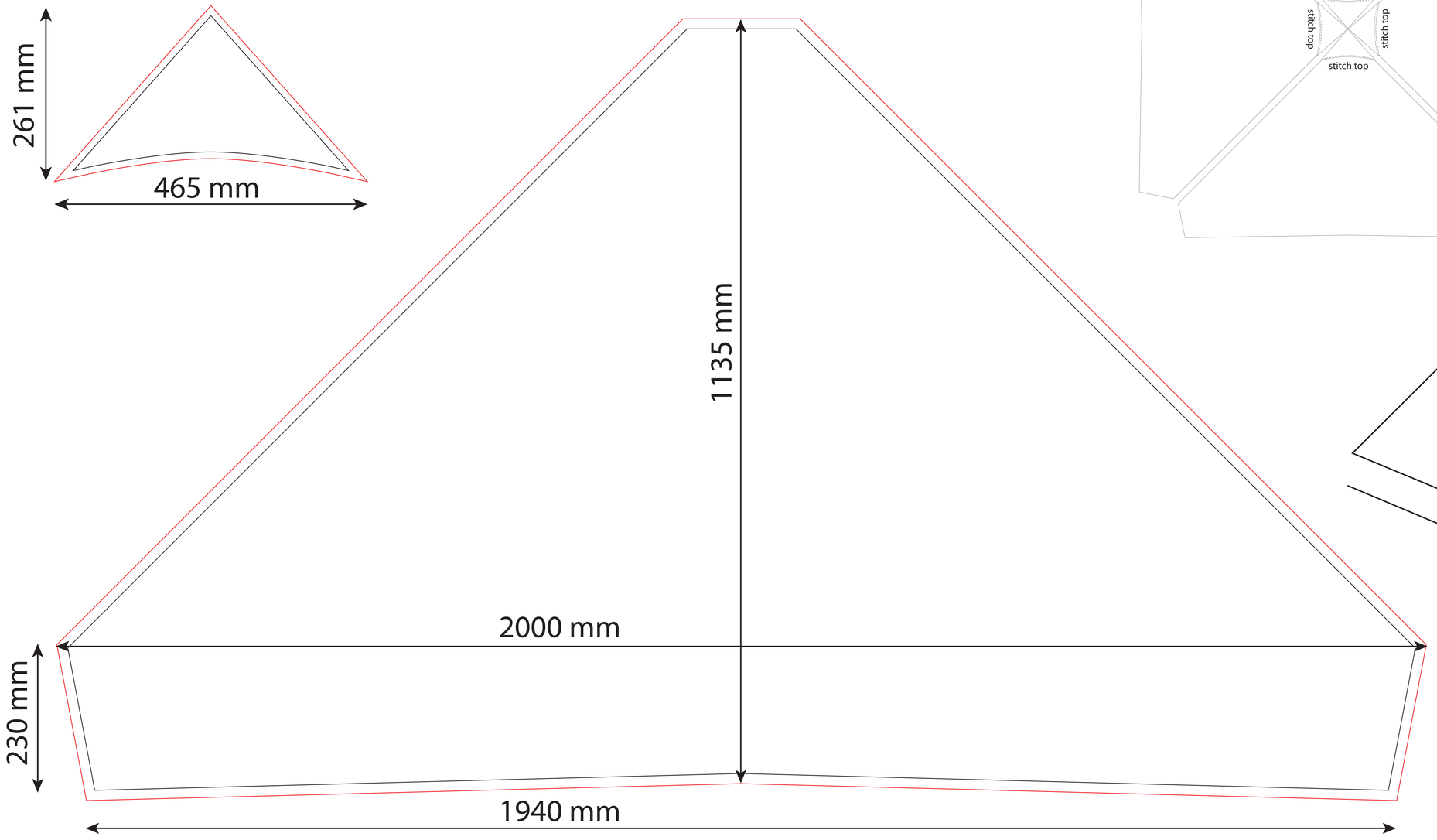

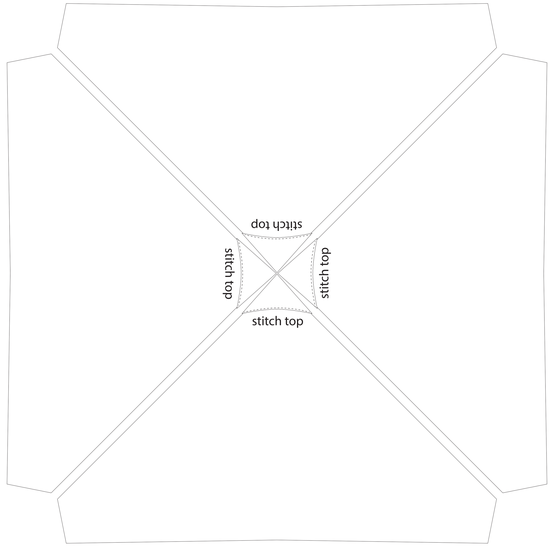

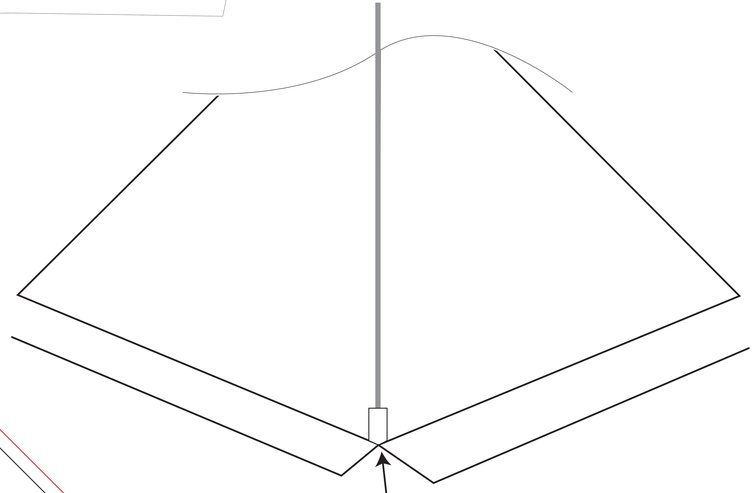

inside pocket
for hardware (40 x 50 mm)