Cutting Sizes

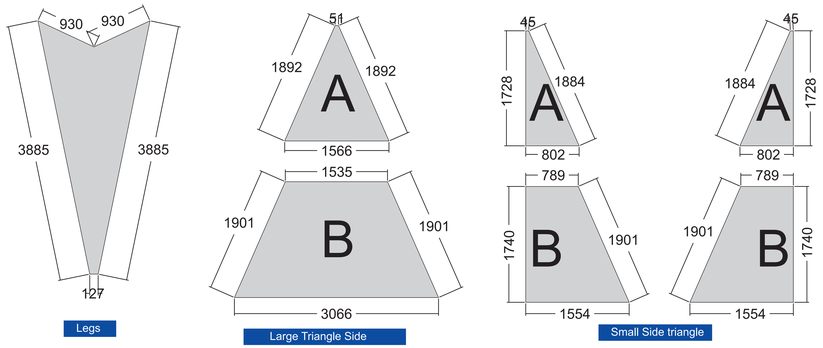

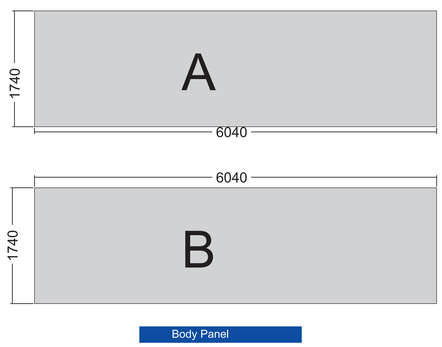

Artwork Dimensions at 100%

Leg:
Bleed Line: 1740 mm (w) x 3863 mm (h)
Cutline: 1684 mm (w) x 3806 mm (h)
Finished Size: 1629 mm (w) x 3748 mm (h)
Safe Area: 1573 mm (w) x 3693 mm (h)

Large Side Traingle A:
Bleed Line: 1631 mm (w) x 1777 mm (h)
Cutline: 1570 mm (w) x 1736 mm (h)
Finished Size: 1501 mm (w) x 1695 mm (h)
Safe Area: 1356 mm (w) x 1418 mm (h)

Large Side Traingle B
Bleed Line: 3129 mm (w) x 1780 mm (h)
Cutline: 3068 mm (w) x 1740 mm (h)
Finished Size: 3006 mm (w) x 1700 mm (h)
Safe Area: 2853 mm (w) x 1600 mm (h)

Small Side Triangle A:
Bleed Line: 860 mm (w) x 1784 mm (h)
Cutline: 802 mm (w) x 1728 mm (h)
Finished Size: 751 mm (w) x 1687 mm (h)
Safe Area: 625 mm (w) x 1424 mm (h)

Small Side Triangle B:
Bleed Line: 1604 mm (w) x 1780 mm (h)
Cutline: 1553 mm (w) x 1730 mm (h)
Finished Size: 1503 mm (w) x 1700 mm (h)
Safe Area: 1377 mm (w) x 1600 mm (h)

Body Panel A:
Bleed Line: 6200 mm (w) x 1780 mm (h)
Cutline: 6040 mm (w) x 1740 mm (h)
Finished Size: 6000 mm (w) x 1700 mm (h)
Safe Area: 5900 mm (w) x 1600 mm (h)

Body Panel b:
Bleed Line: 6200 mm (w) x 1780 mm (h)
Cutline: 6040 mm (w) x 1740 mm (h)
Finished Size: 6000 mm (w) x 1700 mm (h)
Safe Area: 5900 mm (w) x 1600 mm (h)

Jumbo Ex-Star

000000000

Proof Date:	Quantity of Banners:	TEMPLATE IS AT 10% ACTUAL SIZE	File Name: Name_Jumbo_ExStar	Job Number: 00000000000000

Bag Label

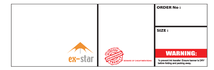

100% Scale for print: 292mm x 94mm

Top Panel of the Ex-Star
No artwork to be placed here.
This panel can only be filled with a solid background colour.

Each panel Rotated 60 Degrees

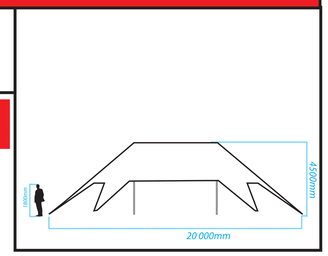

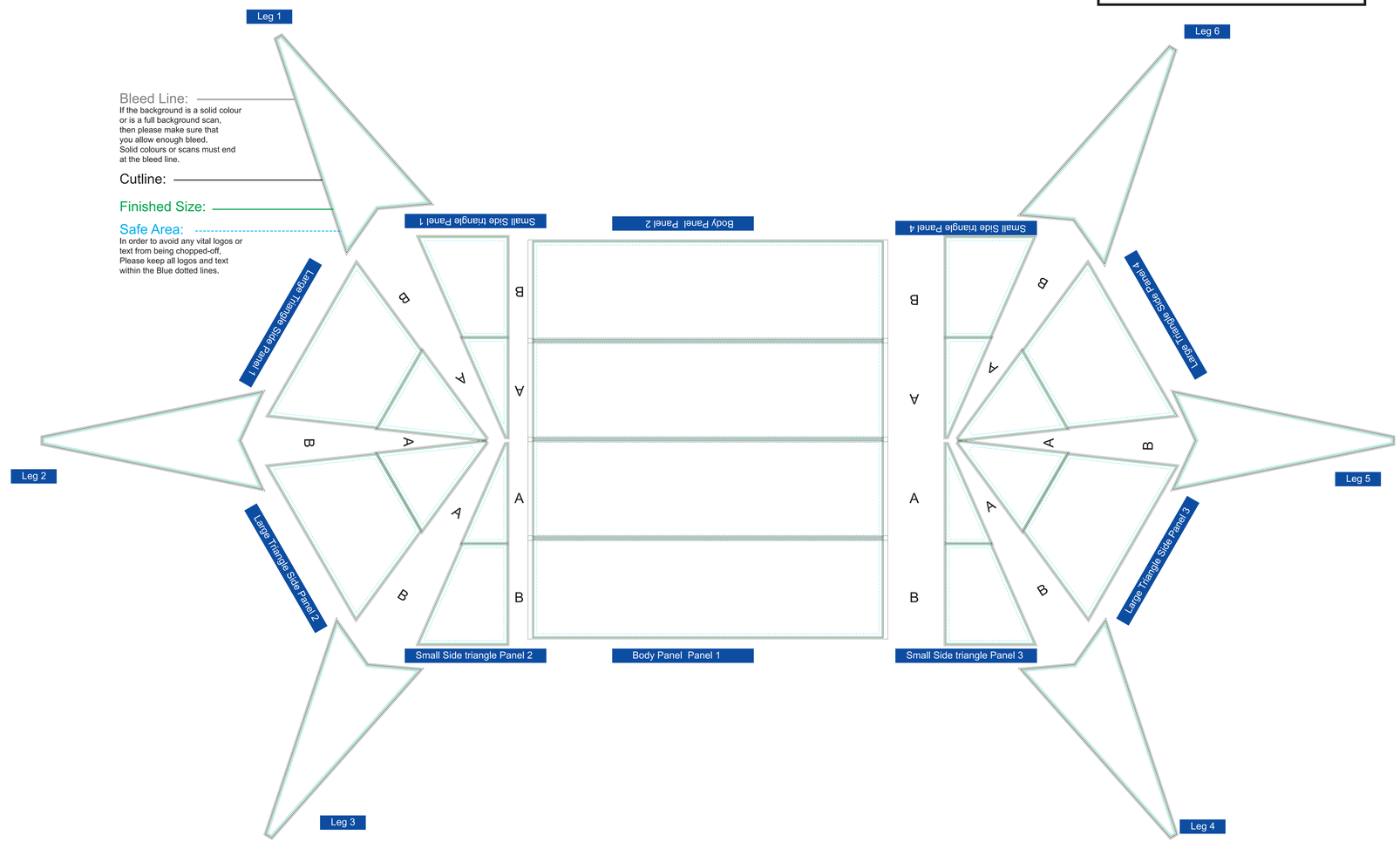

IMPORTANT !

PLEASE NOTE: On all joins we can not guarantee that the artwork elements will join up accurately. A variance of up to 50mm will occur

	JOB NUMBER	DATE
☐ REORDER	0000000	0000/00/00
☐ REDO	0000000	0000/00/00
☐ MATCH TO	0000000	0000/00/00
☐ SOURCE	0000000	0000/00/00

Template Date
2018.03.26

COLOUR

- ☐ No pantones available. Match as close as possible to the CMYK values.
- ☐ Match colour as close as possible to the Colour visual suppled.
- ☐ Match colour as close as possible to the Colour swatch/sample supplied.
- ☐ Percentages of Pantones. Match as close as possible to the equivalent CMYK values supplied by the software used.
- ☐ Single-layer scan. Due to the nature of the artwork it is harder to match individual colours. Match colour as close as possible.

QUALITY OF ARTWORK

- ☐ Intentionally jagged vectored artwork.
- ☐ Low-resolution / pixelated images.

TEMPLATE ISSUES

- ☐ Borders are not guaranteed to be parrallel to the edge of the printablen area.
- ☐ Artwork is intentionally outside or over the "Safe Area" / Seamline.

Ex-Star Walls Long Side

Custom

Template is at 10% Scale

Proof Date:	Quantity of Banners:	Single-Sided	File Name: Name_0_ExStar_Wall_Lrg_0	Job Number: 0000000000

Cutting Diagram

Artwork Dimensions

Panel A

Bleed Line:	9457 mm (w) x 1260 mm (h)
Cutline:	9137 mm (w) x 1220 mm (h)
Finish Line :	9053 mm (w) x 1180 mm (h)
Safe Area:	8969 mm (w) x 1140 mm (h)

Panel B

Bleed Line:	12164 mm (w) x 1750 mm (h)
Cutline:	11844 mm (w) x 1710 mm (h)
Finish Line :	11760 mm (w) x 1670 mm (h)
Safe Area:	11676 mm (w) x 1630 mm (h)

Bleed Line:
If the background is a solid colour or is a full background scan, then please make sure that you allow enough bleed. Solid colours or scans must end at the bleed line.

Cutline:

Finished Size:

Safe Area:
In order to avoid any vital logos or text from being chopped-off, Please keep all logos and text within the Blue dotted lines.

Template Date
2018.03.26

COLOUR

- ☐ No pantones available. Match as close as possible to the CMYK values.
- ☐ Match colour as close as possible to the Colour visual suppled.
- ☐ Match colour as close as possible to the Colour swatch/sample supplied.
- ☐ Percentages of Pantones. Match as close as possible to the equivalent CMYK values supplied by the software used.
- ☐ Single-layer scan. Due to the nature of the artwork it is harder to match individual colours. Match colour as close as possible.

QUALITY OF ARTWORK

- ☐ Intentionally jagged vectored artwork.
- ☐ Low-resolution / pixelated images.

TEMPLATE ISSUES

- ☐ Borders are not guaranteed to be parrallel to the edge of the printablen area.
- ☐ Artwork is intentionally outside or over the "Safe Area" / Seamline.

Ex-Star Jumbo Small Wall

CUSTOM

Job Number: 00000000000000

Single Side

Proof Date:	Quantity of Banners:	File Name:
0000.00.00	0	Name_0_ExStar_Wall_Sml_0_X01

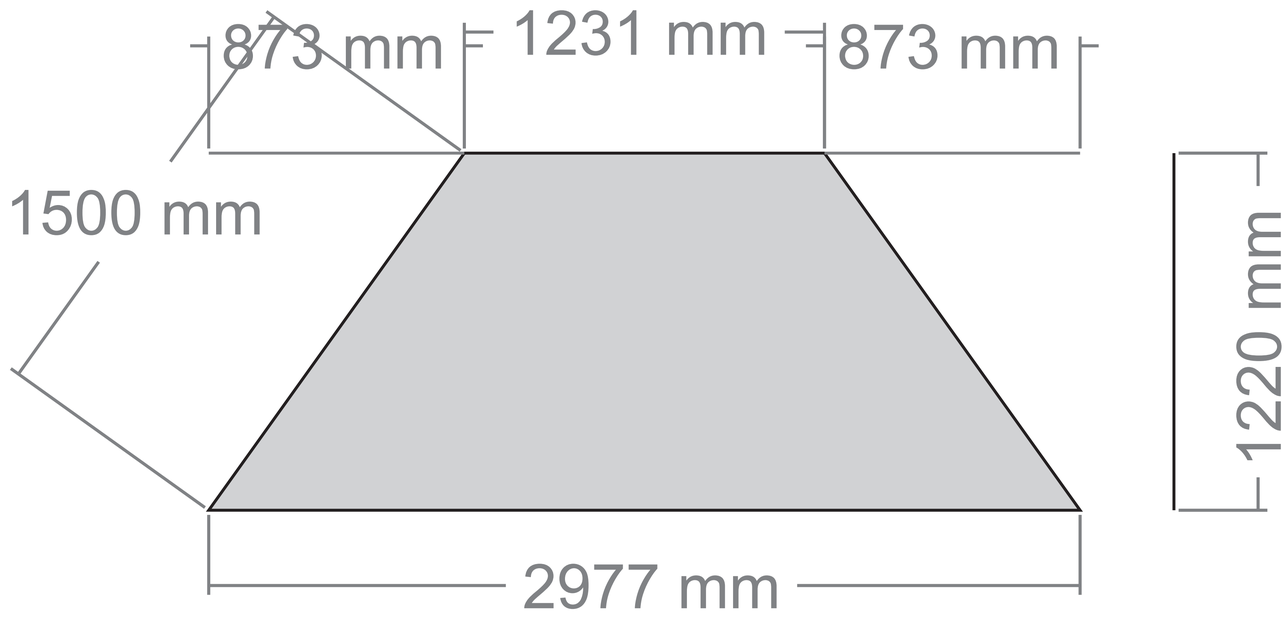

Artwork Dimensions

Panel A

Bleed Line:	3165 mm (w) x 1260 mm (h)
Cutline:	2977 mm (w) x 1220 mm (h)
Finish Line :	2899 mm (w) x 1180 mm (h)
Safe Area:	2821 mm (w) x 1140 mm (h)

Panel B

Bleed Line:	5555 mm (w) x 1750 mm (h)
Cutline:	5368 mm (w) x 1710 mm (h)
Finish Line :	5290 mm (w) x 1670 mm (h)
Safe Area:	5212 mm (w) x 1630 mm (h)

Template is at 10% Scale

Cut Diagram

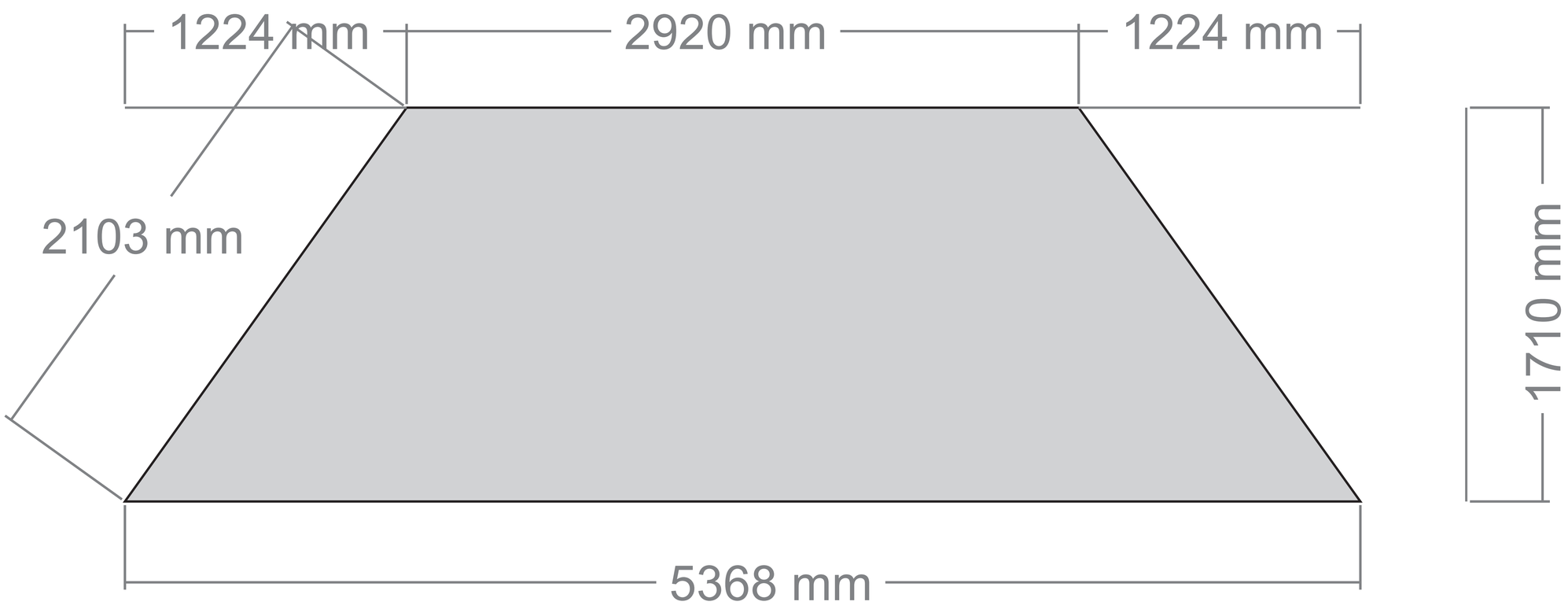

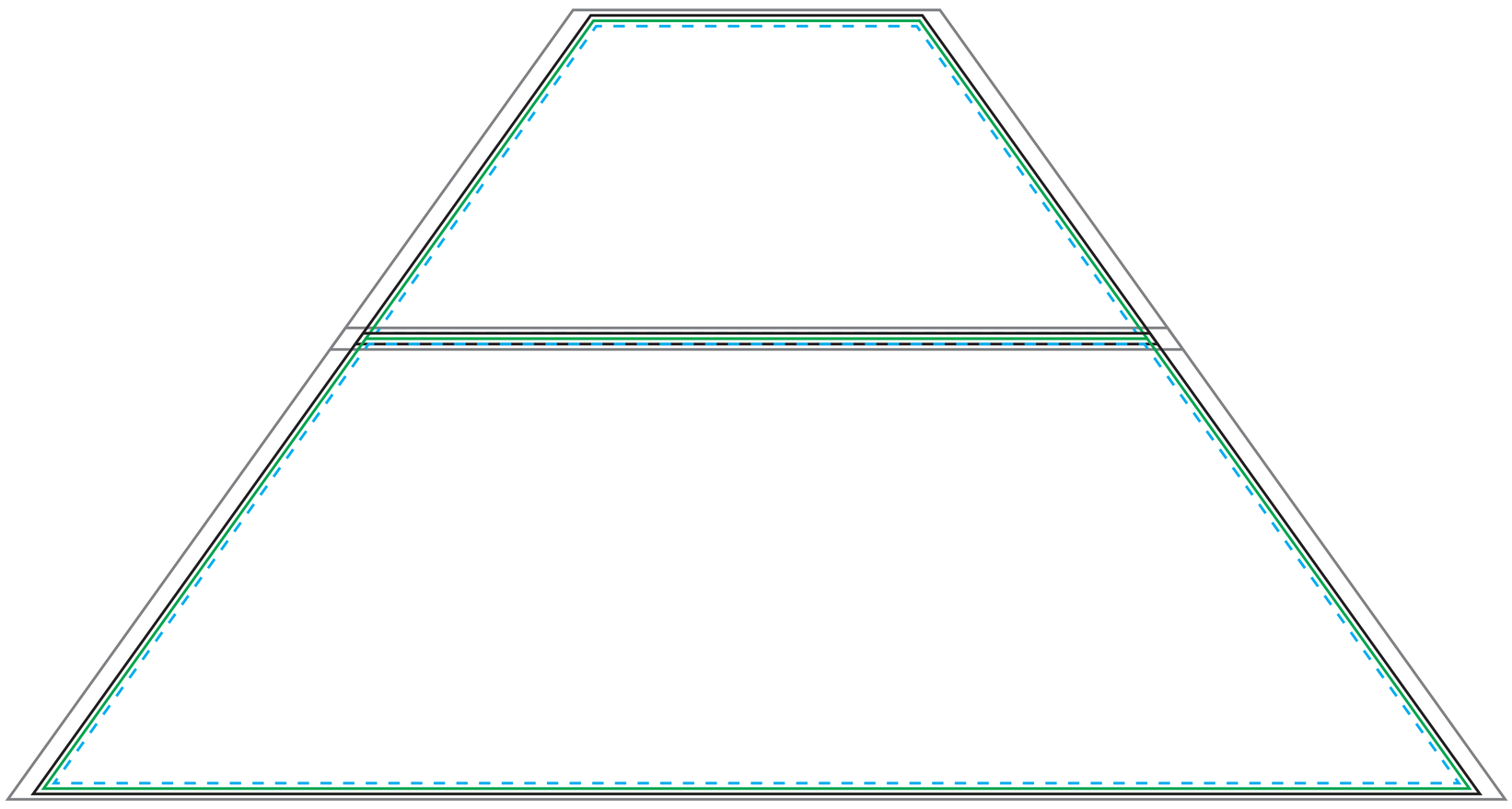

COLOUR

- ☐ No pantones available. Match as close as possible to the CMYK values.
- ☐ Match colour as close as possible to the Colour visual suppled.
- ☐ Match colour as close as possible to the Colour swatch/sample supplied.
- ☐ Percentages of Pantones. Match as close as possible to the equivalent CMYK values supplied by the software used.

COLOUR

- ☐ Single-layer scan. Due to the nature of the artwork it is harder to match individual colours. Match colour as close as possible.

QUALITY OF ARTWORK

- ☐ Intentionally jagged vectored artwork.
- ☐ Low-resolution / pixelated images.

TEMPLATE ISSUES

- ☐ Borders are not guaranteed to be parrallel to the edge of the printable area.
- ☐ Artwork is intentionally outside or over the “Safe Area” / Seamline.

Template Date
2018.03.26